MV 230 *digital* - MK 221

Digital measurement microphone direct to PC

The **MV 230** *digital* measurement microphone preamplifier can record directly to a PC using a USB audio digital interface. It is necessary only for the user to install the driver. The EASERA, SI++ and PAK measurement systems can be used amongst others for example.
The AES42 interface of the microphone performs the transfer of measurement data and supplies power to the microphone preamplifier.
In contrast to studio microphone technology so far, there are no other measurement systems using AES42; AES3, also known as AES/EBU, has become the established interface in the measurement technology field. Microtech has combined suitable phantom powered microphone preamplifiers with the M-Audio soundcard. The M-Audio card has a USB interface which also provides the voltage for the microphone powering.

The system consists of the MK 221 measurement microphone capsule **MV 230** *digital*, measurement amplifier, 3-pin XLR-connecting cable, digital USB audio interface and a USB cable. Using an internal polarization voltage of 200 V, all measurement capsule can be used for either free or diffuse field operation within the audible, infrasonic or ultrasonic ranges (1 Hz to 40 kHz), encompassing the lowest to the highest levels.
The capsule connects to the impedance converter stage of the **MV 230** *digital* providing a dynamic range greater than 130 dB. The signal is amplified in one channel of the 24 Bit-AD-converter and attenuated in the other path. With a capsule having a sensitivity of 50 mV/Pa for example, a measurement signal between 15 dBA and 146 dB will be present in both channels, but in one channel this signal will always lie more than 40 dB outside the limit of resolution.
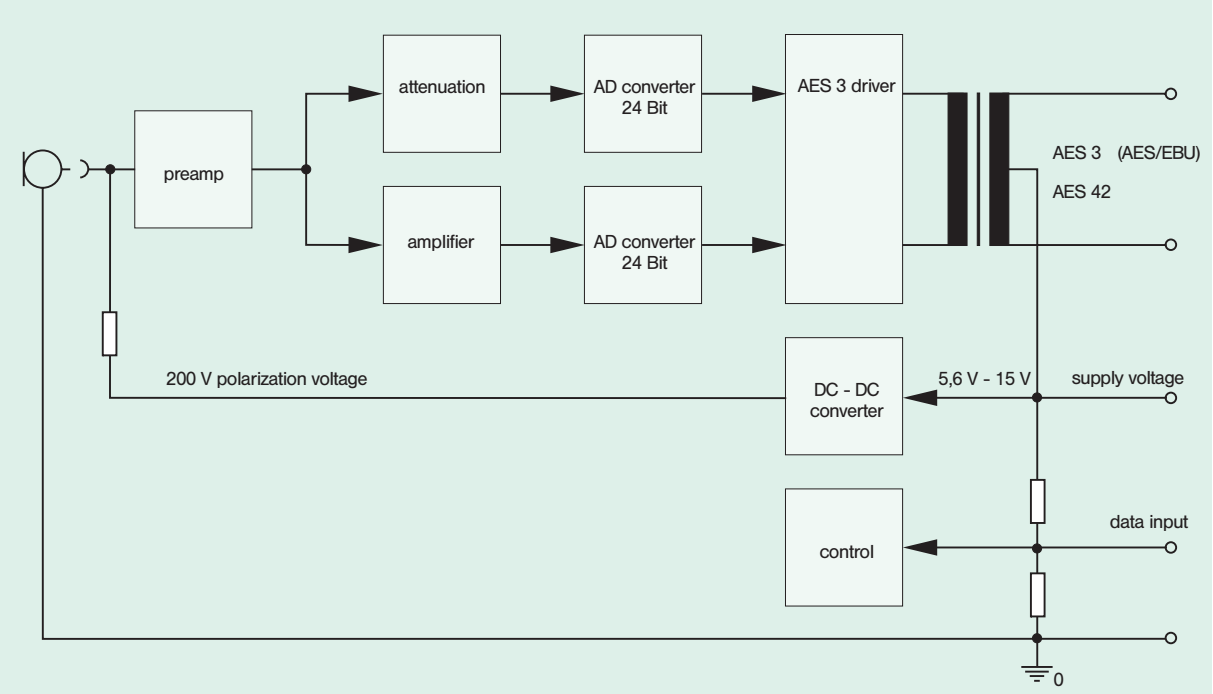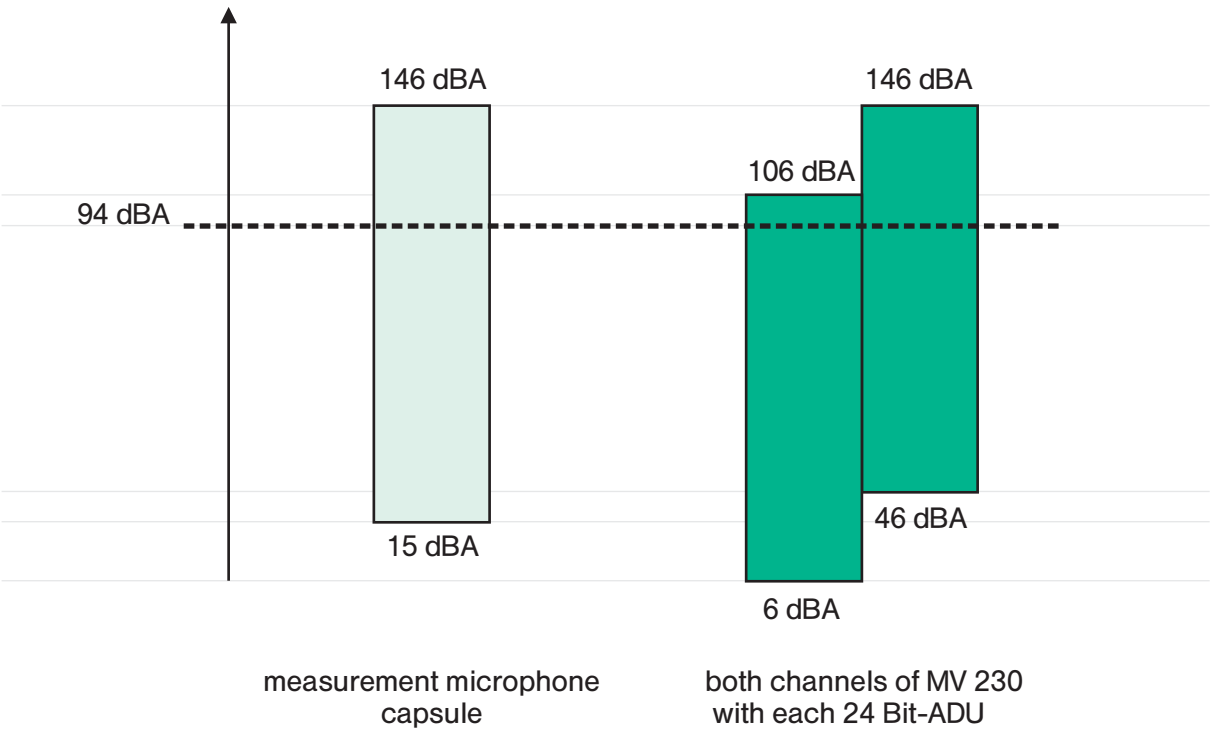
Block Diagram MV 230 *digital*